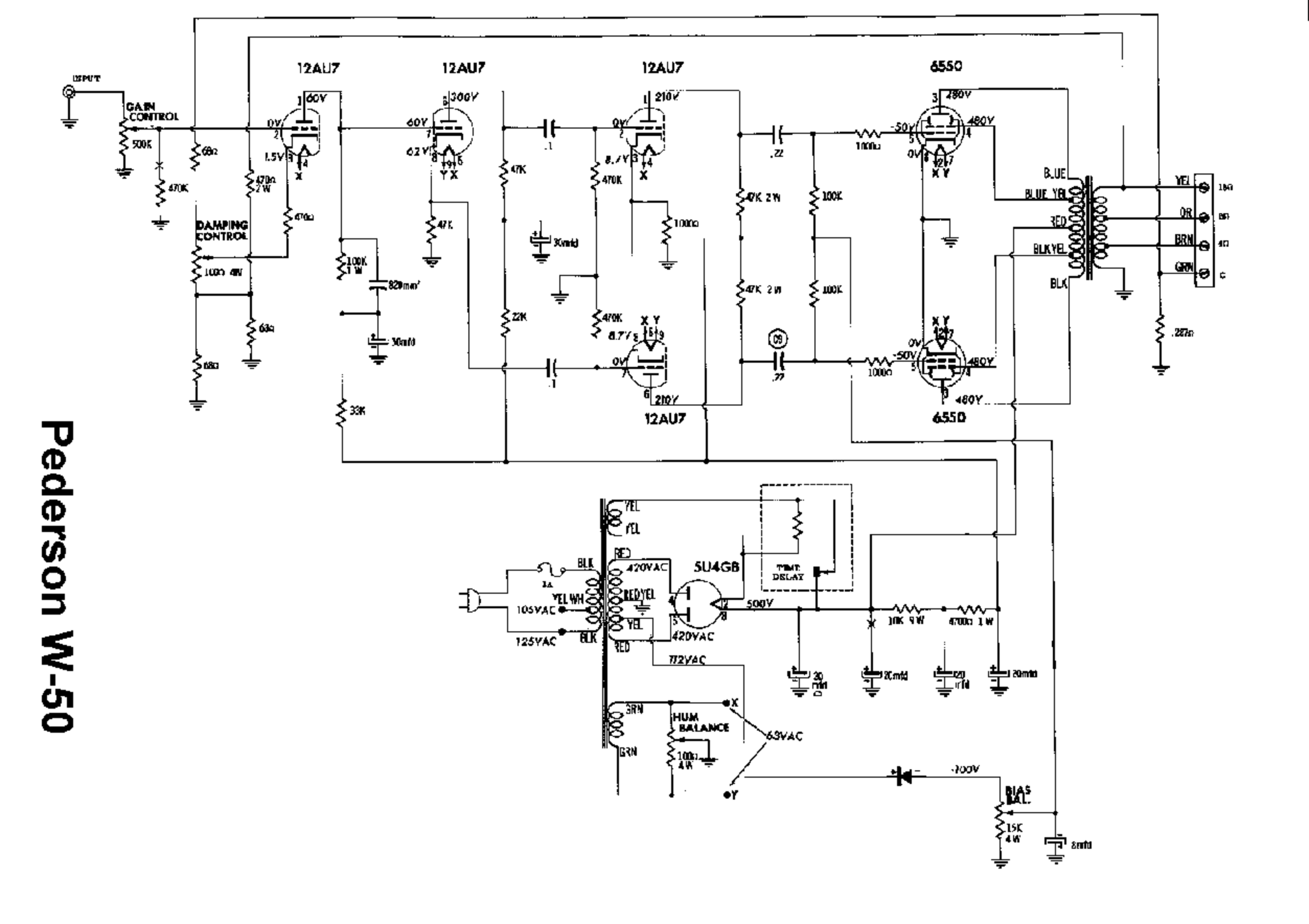

Pederson W-50